K9JM RF Analyzer

Open source / Open Hardware measurement tool for Radio Amateurs

"If you can not measure it, you can not improve it"…. Lord Kelvin

Don't take notes!

This presentation is available on-line at k9jm.com

James Michener K9JM jim@k9jm.com

K9JM RF Analyzer

Open source / Open Hardware measurement tool for Radio Amateurs

Open source / Open Hardware means that everything is available for you to change, contribute to, improve, customize….

One box that can be transformed into a host of measurement devices

K9JM RF Analyzer

Open source / Open Hardware measurement tool for Radio Amateurs

- Focus has been on the platform.
- First pass of four options
- Still work in progress
- Am looking to hear from users and developers regarding desires.

K9JM RF Analyzer

What is it?

It is:

1. Platform hardware
2. Platform software
3. Data collection module
4. Data collection software
5. 3D Printed Box

K9JM RF Analyzer

Platform Hardware

- Fast computer (Arduino Due)
  - USB,RAM, Flash, A/D, D/A, regulators
- 3.5” 320x480 color touch screen
  - Adafruit P2050
- Signal generator
  - DDS module AD9850 or AD9851
- Li Ion battery + charger (Qty 2 - RC123)
- Large data/config EEPROM storage
- Data collection module interface

K9JM RF Analyzer

Platform Hardware

RF Motherboard interconnects

- Capture interface low noise regulator
- RF Level control
- LiIon charger
- Battery
- 64K EEPROM

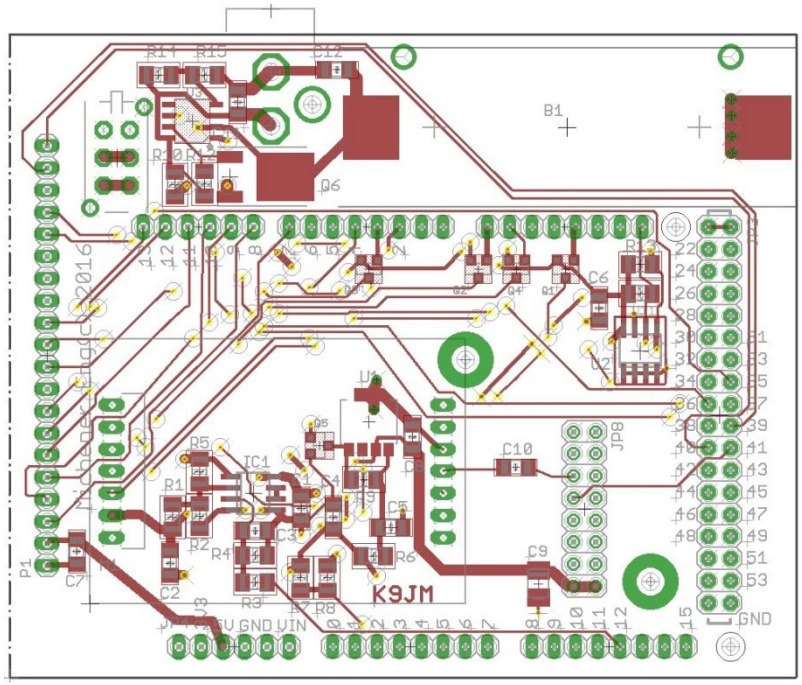

K9JM RF Analyzer

Data collection module

Four interchangeable data collection modules

1. RF “Hi Bridge” - One port high z
2. RF Sweep - Two port (RF out + log det)
3. VNA - Three ports (RF out + A ref + B ref)
4. Noise – DC Receiver + log detector
5. RF – “Lo Bridge” – One port low Z

Question: Any suggestions?

K9JM RF Analyzer

Four different tools

K9JM RF Analyzer

Platform Software

Platform software includes:

1. Touch Screen interface
2. Menu system
3. Small file system
4. Graphing routines - x/y and smith charts

K9JM RF Analyzer

Platform Software

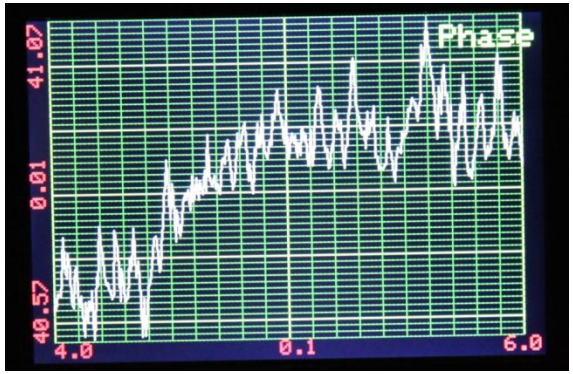

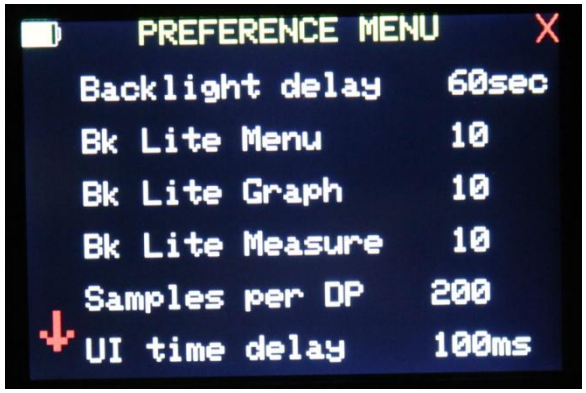

K9JM RF Analyzer

RF Interface Boards

All RF Interface Boards contain an EEPROM that stores:

- Configuration data
- Calibration data
- Reference data files

Data stays with the module when changed

K9JM RF Analyzer

RF Bridge Board

RF Bridge Board (One port)

RF Amplifier +7dB sweep level

Analog Devices AD8302 RF Gain and Phase Detector

- Measures phase angle in a 0 to 90 degree range.
- Determines sign of the phase by looking at $d\phi/d\omega$
- Calibration against reference, short, open and 50 ohm load.

K9JM RF Analyzer

RF “Hi Bridge” Board

RF “Hi Bridge” Board (One port)

Can be used for:

- Complex impedance measurement.
- Swept or single frequency
- Display options
  - |Z|
  - Phase
  - VSWR (software variable Zo)
  - Smith Chart
- Component measurement
  - Series or parallel (R + jX) circuit at a single frequency
- Crystal evaluation

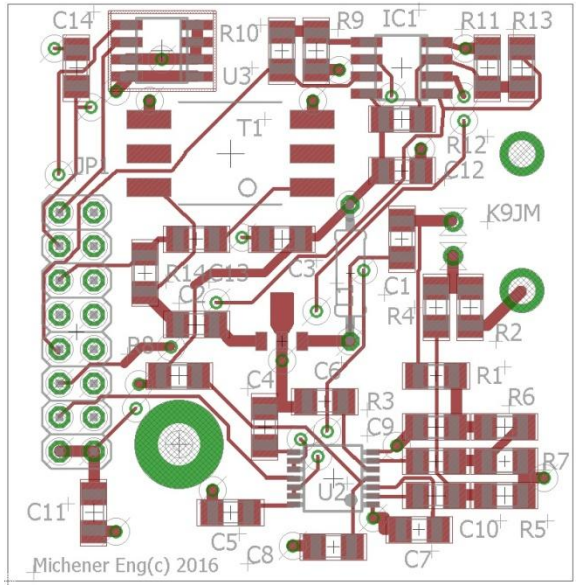

Note: Not a true bridge since it uses the AD8302

K9JM RF Analyzer

RF Bridge Board

AD8302 as a measurement device

Not a true bridge for magnitude

it measures the ‘gain’ across the bridge in dB

Measure phase across the bridge

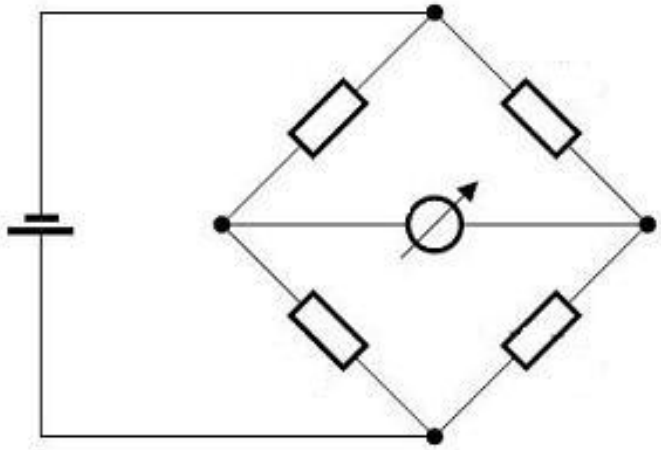

K9JM RF Analyzer

RF “Hi Bridge” Board

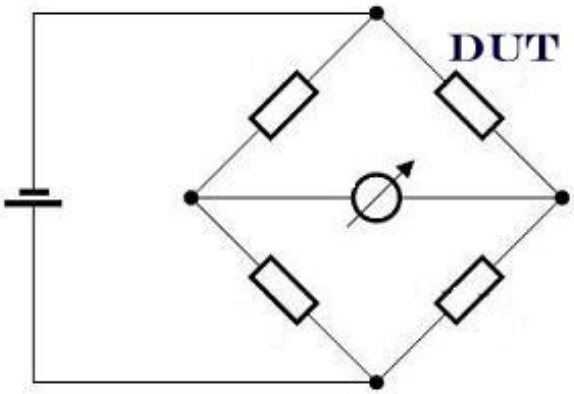

“Hi Bridge”

Most accurate for measuring higher Z

Low resolution for Lower Z

Note: Difficult to measure high Z due to lead / BNC capacitance

K9JM RF Analyzer

RF “Lo Bridge” Board

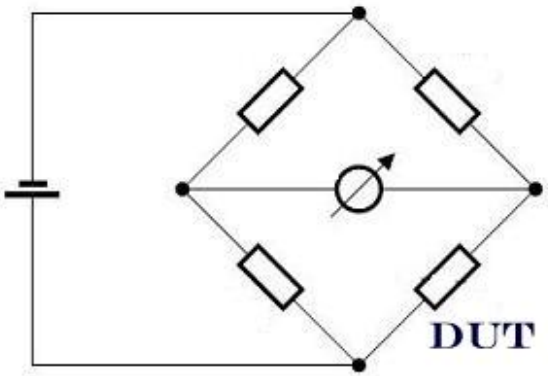

“Lo Bridge”

Most accurate for measuring lower Z

Low resolution for High Z

Note: It is difficult to measure low Z at RF due to lead inductance

No work has been done on this version as it may not be necessary for most amateur work. *Is this a valid assumption?*

K9JM RF Analyzer

RF Sweep Board

RF Sweep Board (Two Port)

RF Output: 50 ohm -6dBm to -36dBm adjustable

Calibration to within < .1ppm

RF Input: 50 ohm +16dBm to -74dBm

- Analog Devices AD8307 Logarithmic Amplifier/Detector
  - 90dB dynamic range
  - Better than +/- 1 dB accuracy, +/- .02dB resolution

Can be used as a:

- Signal generator
- RF Voltmeter
- Sweep generator

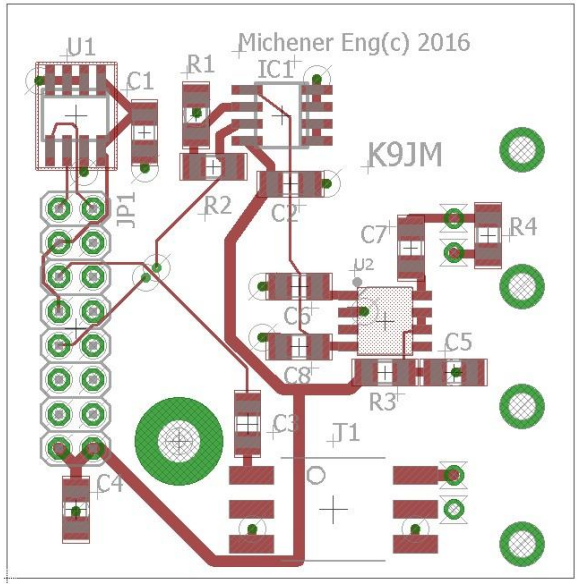

K9JM RF Analyzer

RF VNA Board

RF VNA Board (Three Port)

RF Output: 50 ohm -6dBm to -36dBm adjustable

Calibration to within < .1ppm

RF Input A: 50 ohm 0dBm to -60dBm

RF Input B: 50 ohm 0dBm to -60dBm

- Analog Devices AD8302 Gain Phase /Detector
  - 60dB dynamic range
  - Better than +/- .5 dB accuracy, +/- .02dB resolution
  - Better than 1 degree accuracy, +/- .05 degree resolution
  - 180 degree phase range
  - Determines sign of the phase by dϕ/dω

Have done the least development on this board.

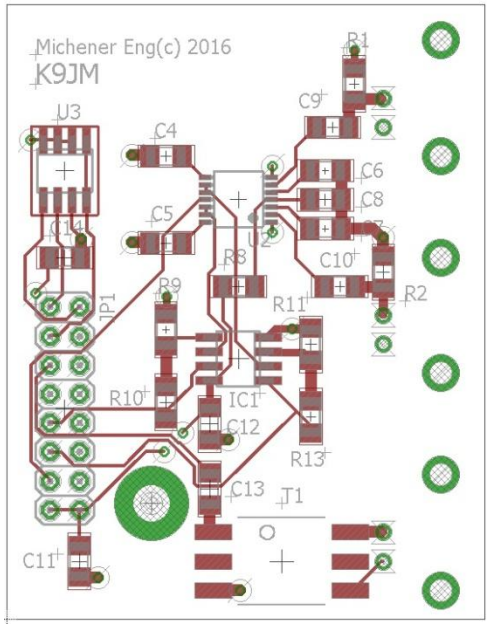

K9JM RF Analyzer

RF Noise Board

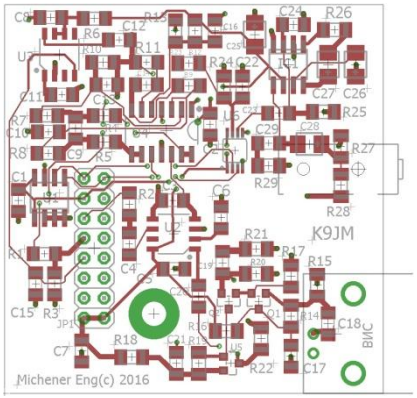

RF Noise Board

A direct conversion receiver that can be used to measure and sniff out RF noise sources. Audio monitor, digitizes audio, measures level in dB. Fixed bandwidth spectrum analyzer sweep with about 4KHz bandwidth.

Contains

- RF Pre-amplifier
- SA602A Mixer
- Analog devices AD8307 Logarithmic detector (operates on audio)
- LM386 Audio amplifier / gain control to drive headphone

K9JM RF Analyzer

What does this look like?

First the box….

3D printed box 5” x 3 3/8” x 2”

2mm thick ABS

Easily customized to meet requirements.

Design in Open SCAD

K9JM RF Analyzer

Box -- Bottom

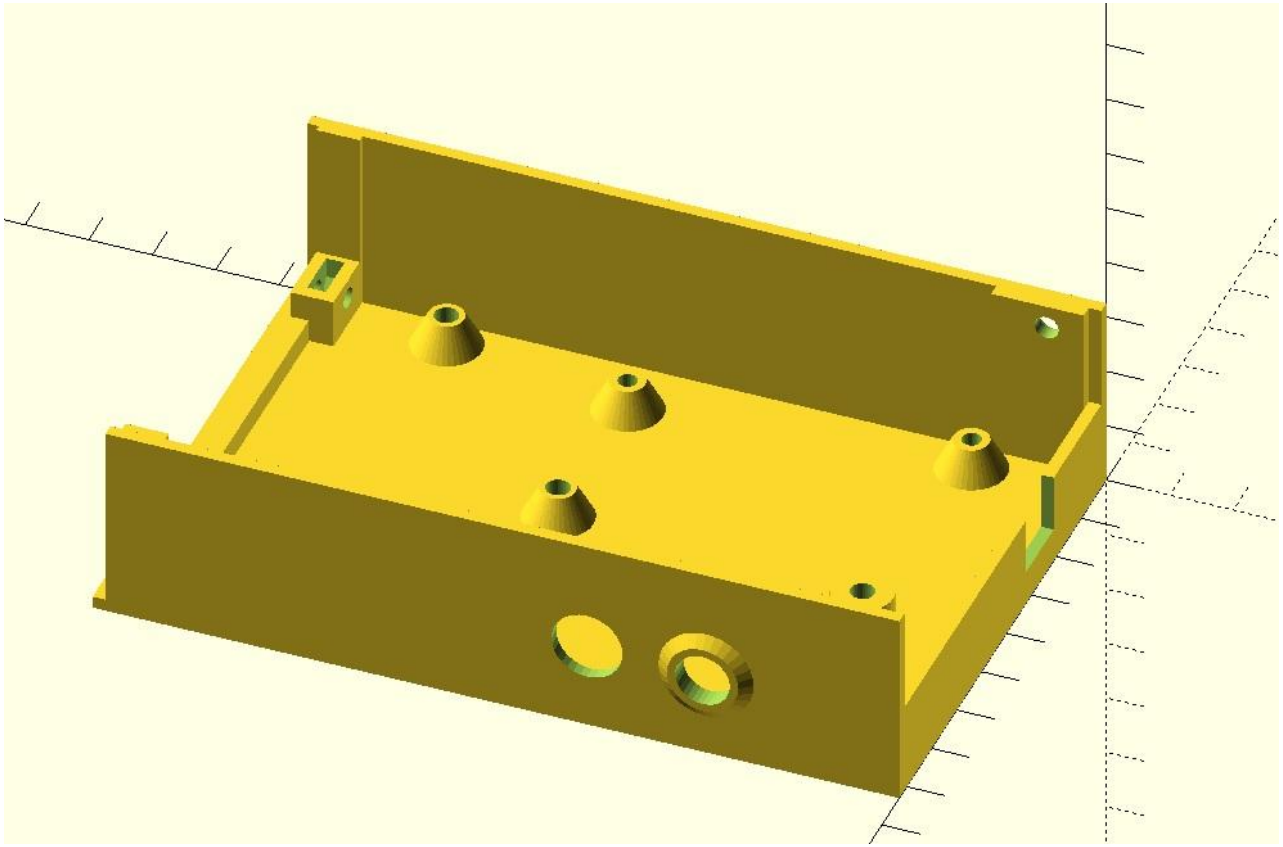

K9JM RF Analyzer

Box -- Top

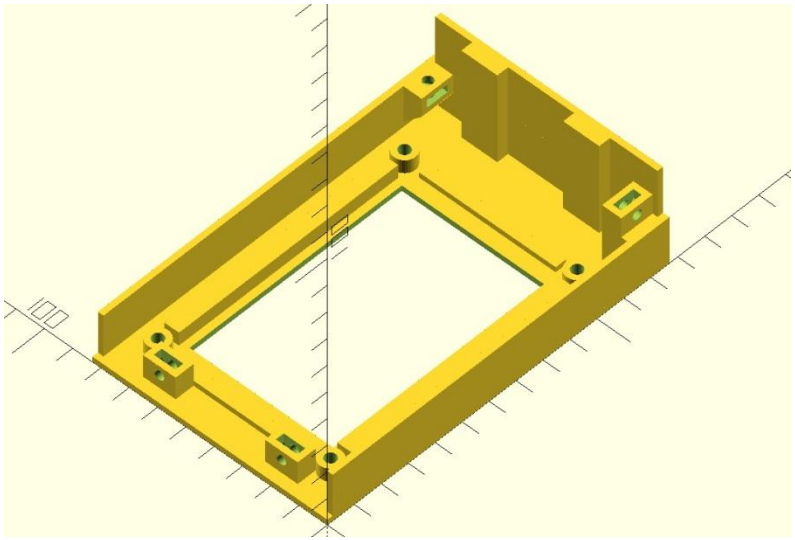

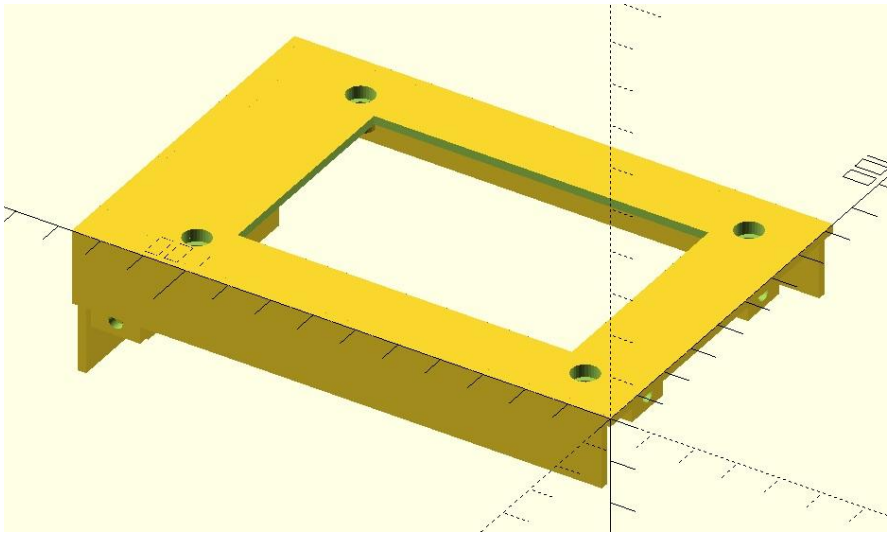

K9JM RF Analyzer

Box -- End Plate

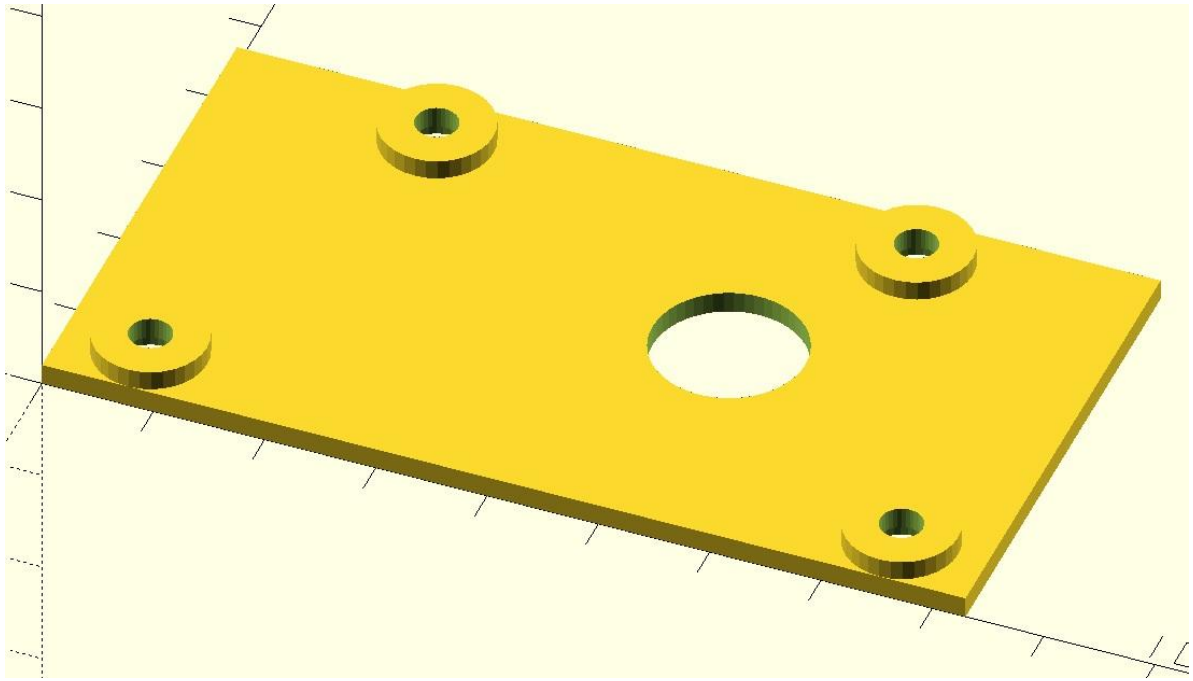

K9JM RF Analyzer
Platform

What does this look like?

1. RF Motherboard
2. Arduino Due (no longer available from Arduino)
3. DDS Module
4. Touch Screen Display

K9JM RF Analyzer

Arduino Due

Roll over image to zoom in

KOOKYE DUE R3 32 Bit ARM Compatible Shield Module Board With USB Cable for Arduino

by KOOKYE

1 customer review

Price: $15.99 & **FREE Shipping**

Your cost could be **$10.99**: Qualified customers get $5 in Gift Card funds on first $100 reload of their Amazon Gift Card Balance. Learn more

In Stock.

Get it as fast as Oct. 21 - Nov. 8.

Ships from and sold by KOOKYE.

- The Arduino Due is a microcontroller board based on the Atmel SAM3X8E ARM Cortex-M3 CPU (datasheet)
- It is the first Arduino board based on a 32-bit ARM core microcontroller
- The board contains everything needed to support the microcontroller; simply connect it to a computer with a micro-USB cable or power it with a AC-to-DC adapter or battery to get started
- The bootloader is preburned in factory from Atmel and is stored in a dedicated ROM memory. The available SRAM is 96KB in two contiguous bank of 64KB and 32KB. All the available memory (Flash, RAM and ROM) can be accessed directly as a flat addressing space
- It is possible to erase the Flash memory of the SAM3X with the onboard erase button. This will remove the currently loaded sketch from the MCU. To erase, press and hold the Erase button for a few seconds while the board is powered

Share

Qty: 1

$15.99 + Free Shipping

In Stock. Sold by **KOOKYE**

Add to Cart

Turn on 1-Click ordering for this browser

Ship to:

James Michener - 95949

Add to List

Have one to sell? Sell on Amazon

K9JM RF Analyzer

DDS Module (two options)

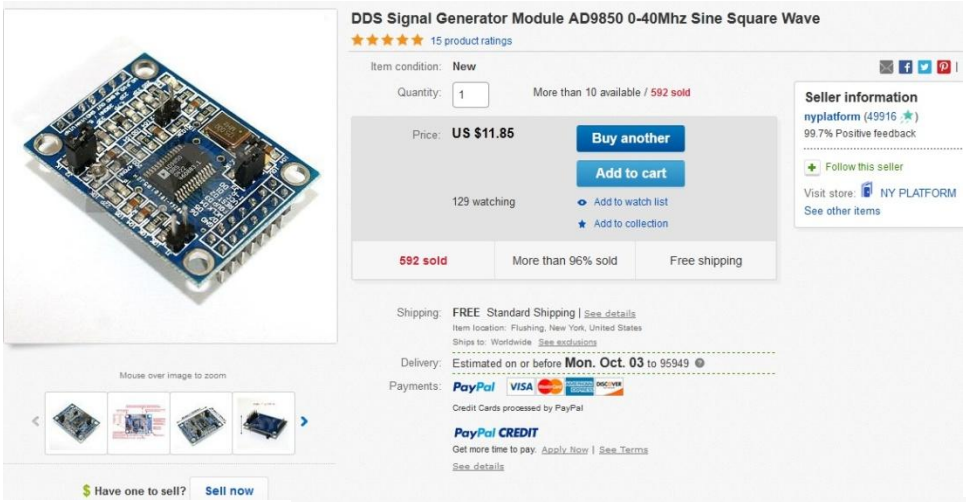

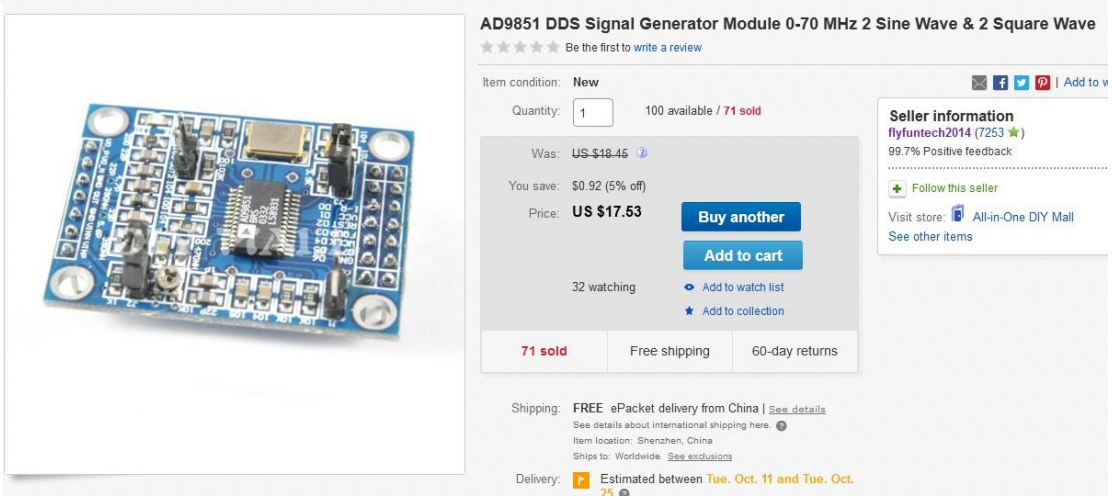

K9JM RF Analyzer
Adafruit P2050

adafruit SHOP BLOG LEARN FORUMS VIDEOS

LCDS & DISPLAYS / GRAPHIC TFT / 3.5" TFT 320X480 + TOUCHSCREEN BREAKOUT BOARD W/MICROSD SOCKET

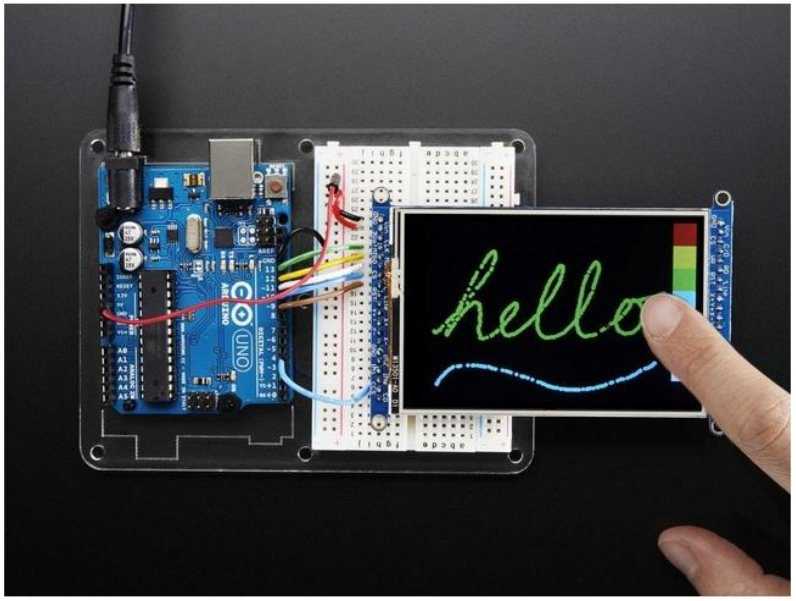

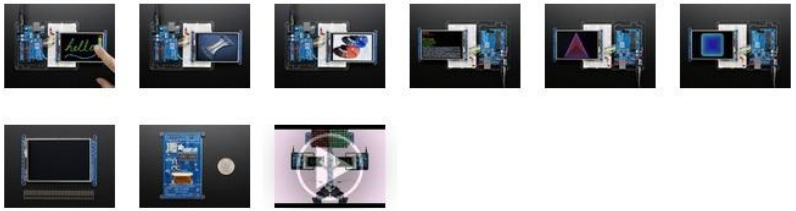

3.5" TFT 320x480 + Touchscreen Breakout Board w/MicroSD Socket - HXD8357D

PRODUCT ID: 2050

$39.95

IN STOCK

1 ADD TO CART

QTY	DISCOUNT
1-9	$39.95
10-99	$35.96
100+	$31.96

ADD TO WISHLIST

DESCRIPTION

TECHNICAL DETAILS

LEARN

K9JM RF Analyzer

Putting it together -- top

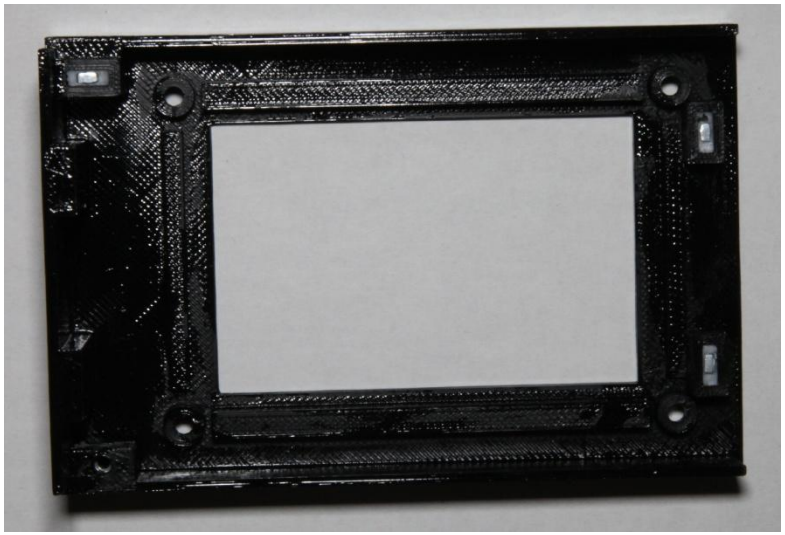

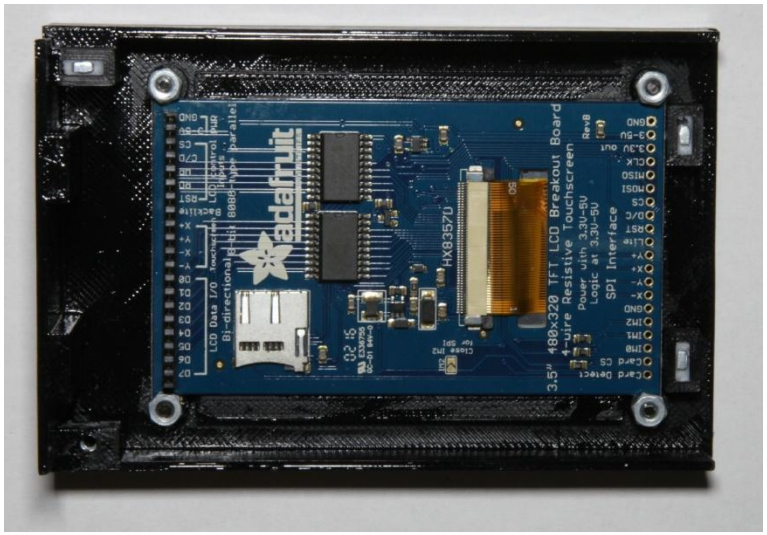

K9JM RF Analyzer

Putting it together – base (old)

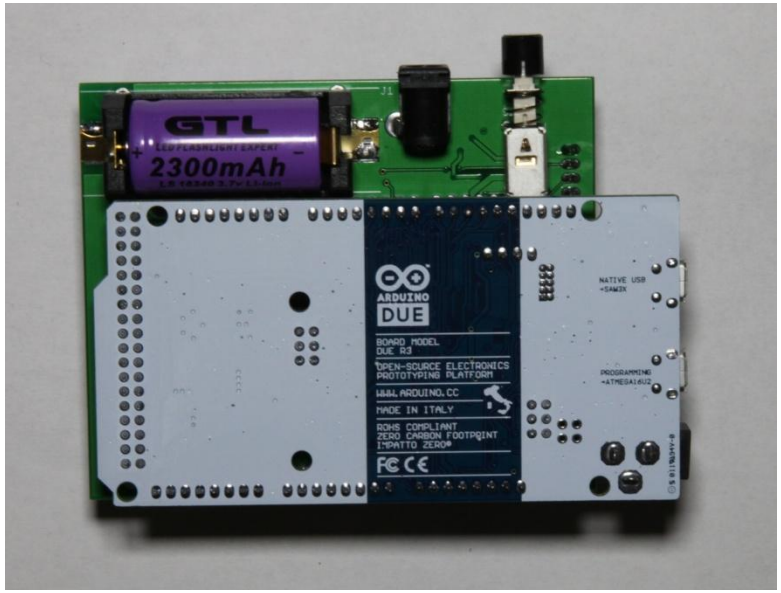

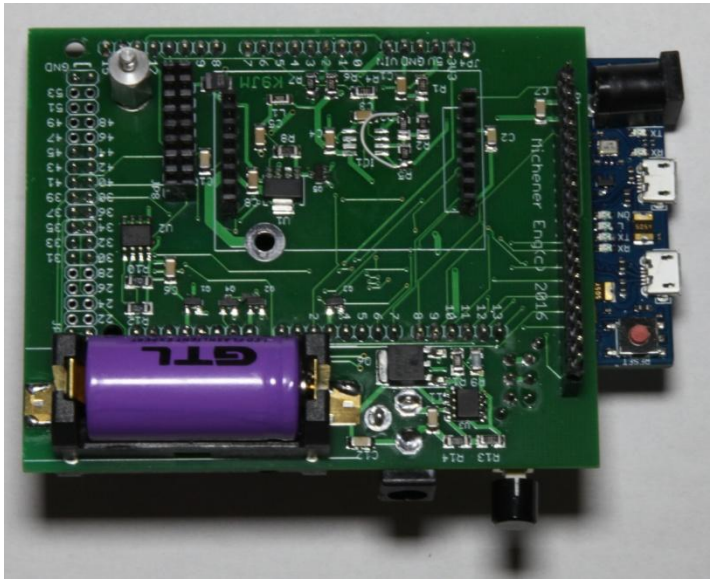

K9JM RF Analyzer

Putting it together – base (old)

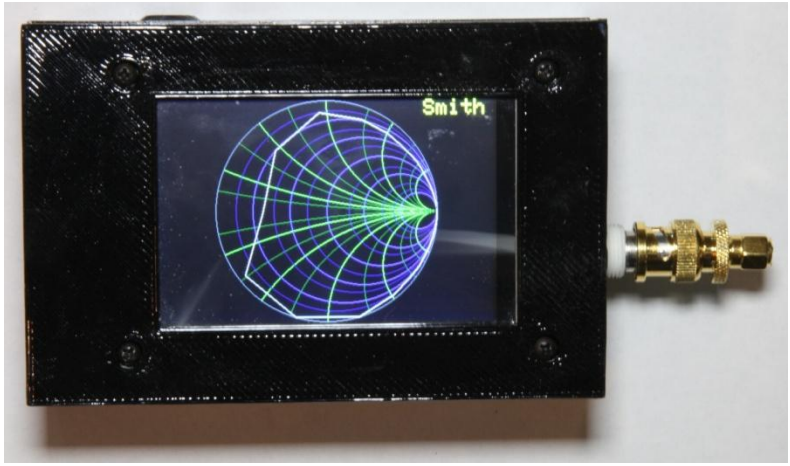

K9JM RF Analyzer
Battery

Using two Lithum cells… three options
Non rechargeable CR123 Photo cell
Rechargeable RC123 -- no circuit board
Rechargeable RC123 -- with protection

Run time ~ 3 hours in review less while collecting data.

Charger: Recommend 9 volt > 250 ma

K9JM RF Analyzer
Discussion

What I have learned.

What do you want?

1. One Port
2. Two Port
3. Three Port
4. Noise